MODEL NO. :
PJR-D31560-ABK7AU06L-RH
(1) (2)(3) (4)(5)(6)

(1) Series no.
(2) Schematic type: A
(3) Housing color:
BK7=Black
(4) Terminal plating:
AU06=Plating Gold 30″ min.
(5) Packing mode:L=Reel packing
(6) Environmental requirements:
Rh=RoHS 2.0 + Halogen Free

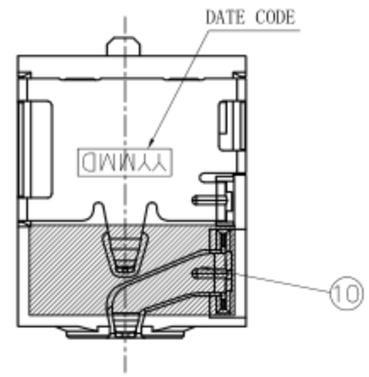

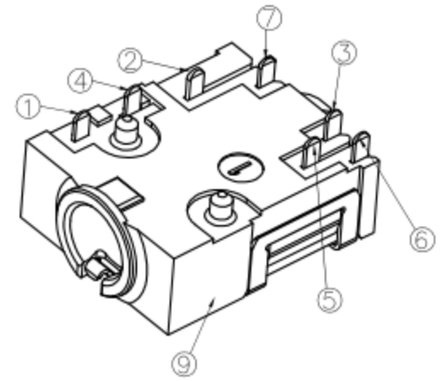

Matching Plug

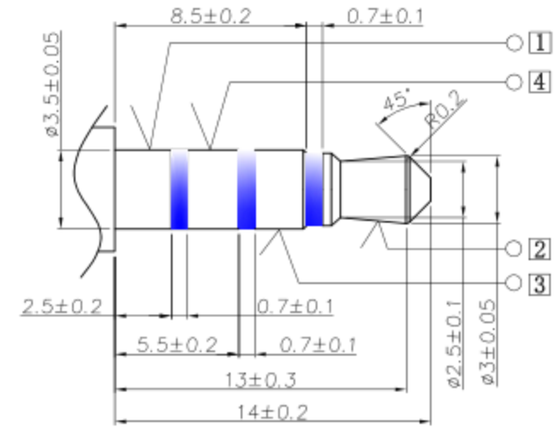

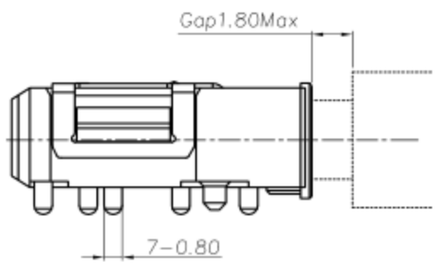

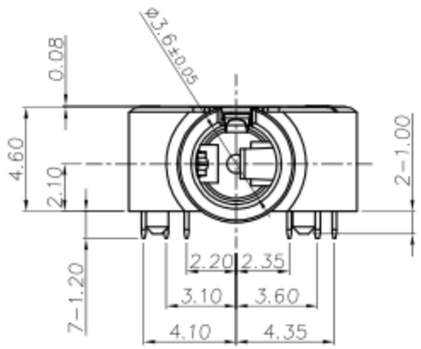

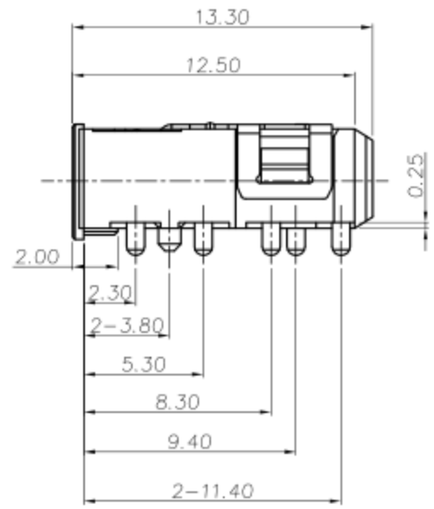

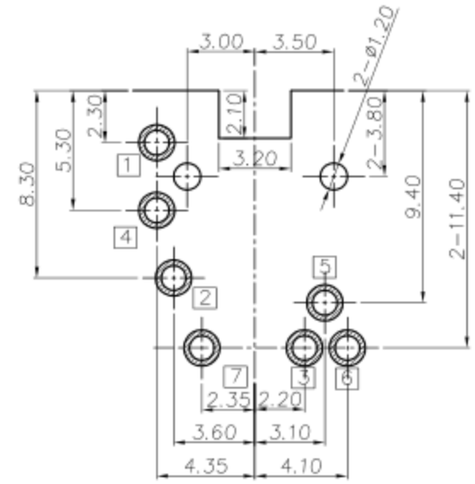

RECOMMENDED P.C.B LAYOUT(t=1.0mm)
TOP VIEW (TOLRANCE:±0.05)

SPECIFICATION:
1. Electrical characteristics
1-1. Current rating:DC 0.5A max.
1-2:Voltage rating:DC 30V.
1-3:Contact resistance:50mΩ max.
1-4. Insulation resistance:100MΩ min. at 500V DC.
1-5. Withstanding voltage:500V AC for 1 minute.
2. Mechanical characteristics
2-1. Life test:5000 cycles min,
2-2. Mating force:3～30N,
Unmating force:3～30N.

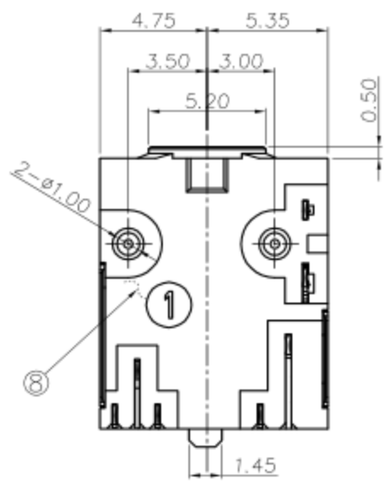

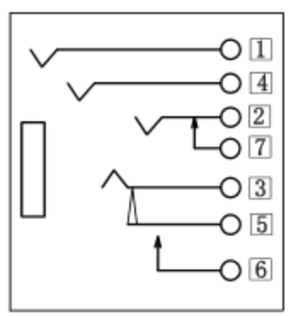

Circuit Diagram A

NO.	DESCRIPTION	QTY	MATERIAL	REMARK
10	Mylar	1	Kapton	Yellow
9	Housing	1	HIGH TEMPERATURE PLASTIC	Black
8	Molding	1	HIGH TEMPERATURE PLASTIC	Black
7	Shunt terminal 7	1	Phosphor bronze, 0.20t	Gold Flash On Contact Area And Solder Tail , All over Nickel Plated.
6	Shunt terminal 6	1	Phosphor bronze, 0.20t	Gold Flash On Contact Area Tin Plating on Solder Tail Area , All over Nickel Plated
5	Transfer Spring 5	1	Phosphor bronze, 0.20t	Gold 30u"Min On Contact Area Gold Flash on Solder Tail Area , All over Nickel Plated
4	Ring spring(shell) 4	1	Phosphor bronze, 0.20t	
3	Ring spring 3	1	Phosphor bronze, 0.20t	
2	Tip spring 2	1	Phosphor bronze, 0.25t	
1	Earth spring 1	1	Phosphor bronze, 0.20t	

ECN NO.	REV	DATE	DESCRIPTION	CHANGE	APPRO.
	A-0	2018.06.13	NEW	罗振强	李海鸥

GENERAL TOLERANCE UNLESS OTHERWISE NOTED	
Angle	±1.5°
.x	±0.35
.xx	±0.25
.xxx	±0.20

DESIGN	罗振强	2018.06.13
CHECK		
APPROVAL		
SCALE: 1:1	UNIT:mm	A4

东莞市高迪电子有限公司

CUSTOMER DRAWING	TITLE:	ø3.5mm PHONE JACK
	MODEL NO.	PJR-D31560-ABK7AU06L-RH
SHEET:1 of 1	FILE NO.	Q/DY.QW-001A-0655

原始设计：罗振强 承认：李海鸥 日期：2018.03.06

UP WIN